SK: NÁVOD NA MONTÁŽ / CZ: NÁVOD K MONTÁŽI / HU: ÖSSZESZERELÉSI ÚTMUTATÓ / HR: UPUTE ZA MONTAŽU / RO: INSTRUCȚIUNI DE MONTAJ / EN: ASSEMBLY INSTRUCTIONS / DE: MONTAGEANLEITUNG / SI: NAVODILA ZA MONTAŽO

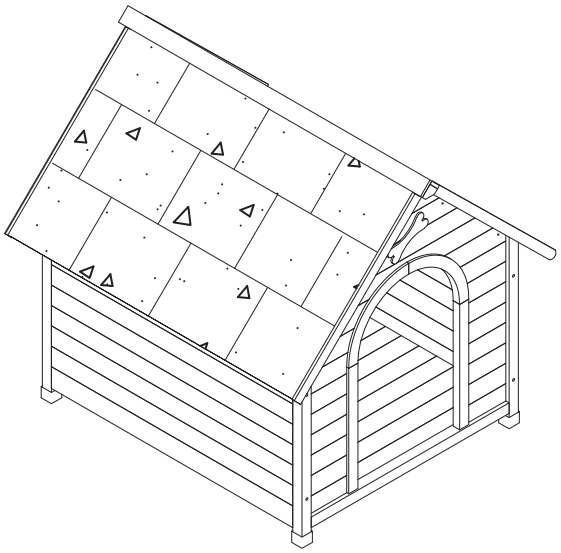

1	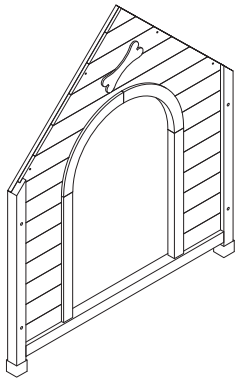	1PC	4	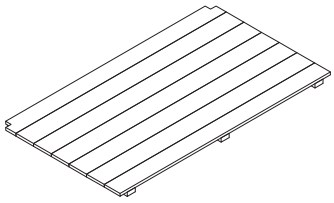	2PCS
2	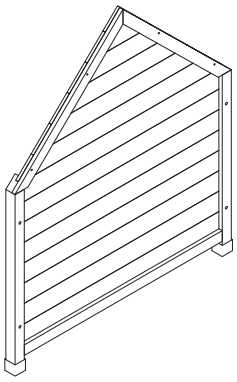	1PC	5	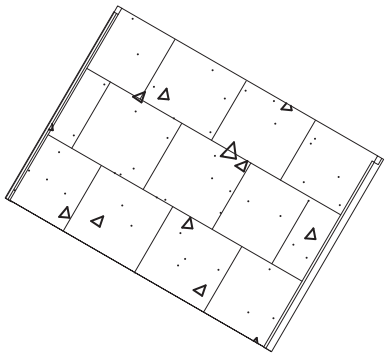	2PCS
			6	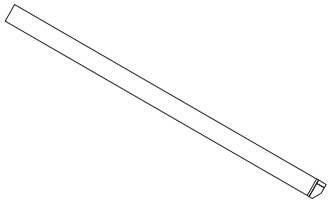	1PC
3	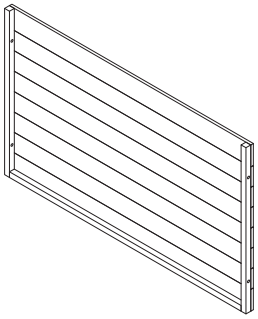	2PCS	A	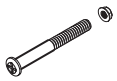 Ø6*60	8PCS
			B	 3.5*35	8PCS
			C	 3*25	4PCS

1

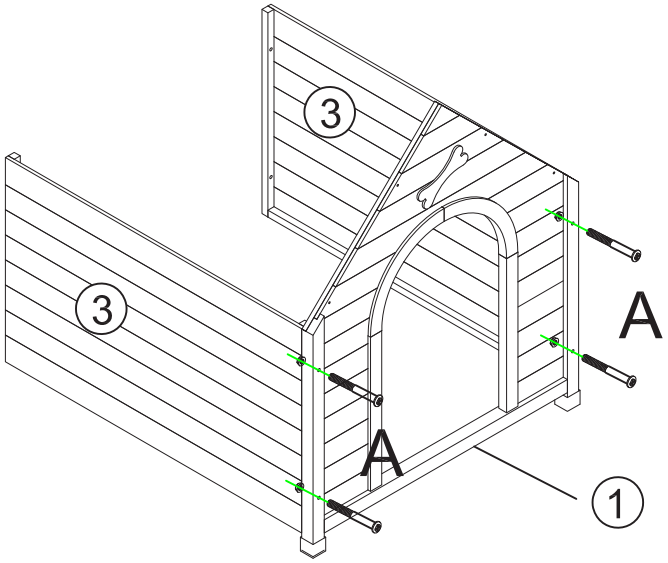

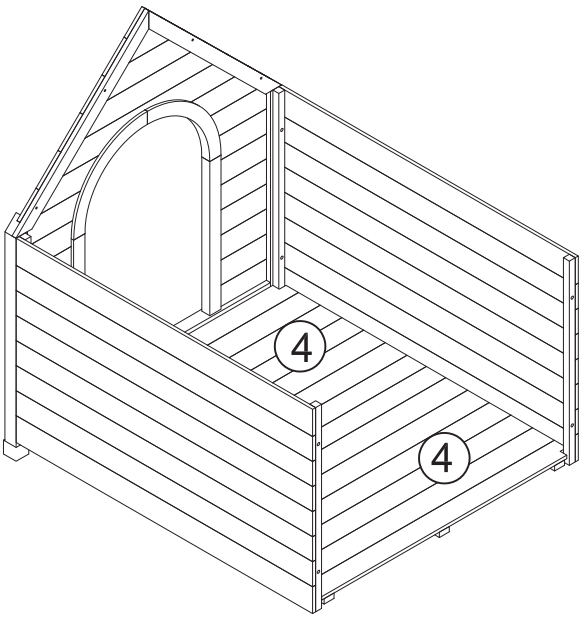

2

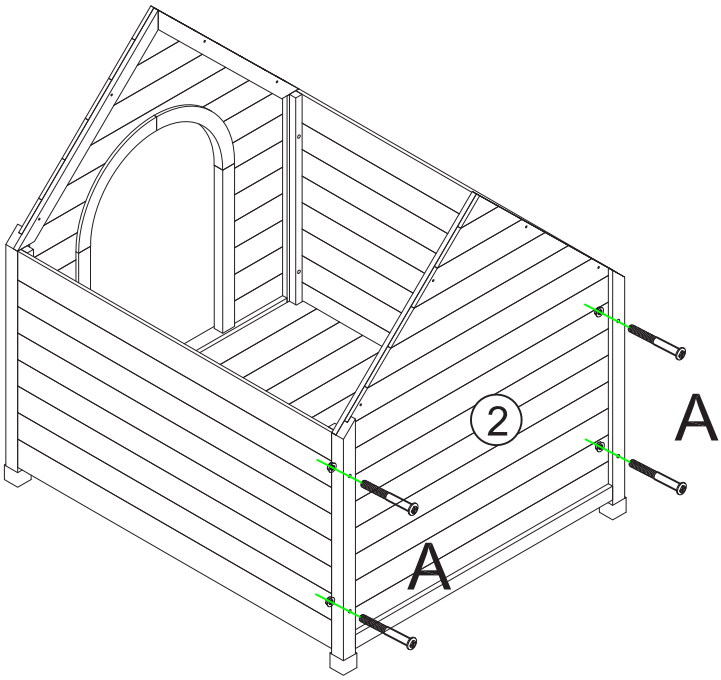

3

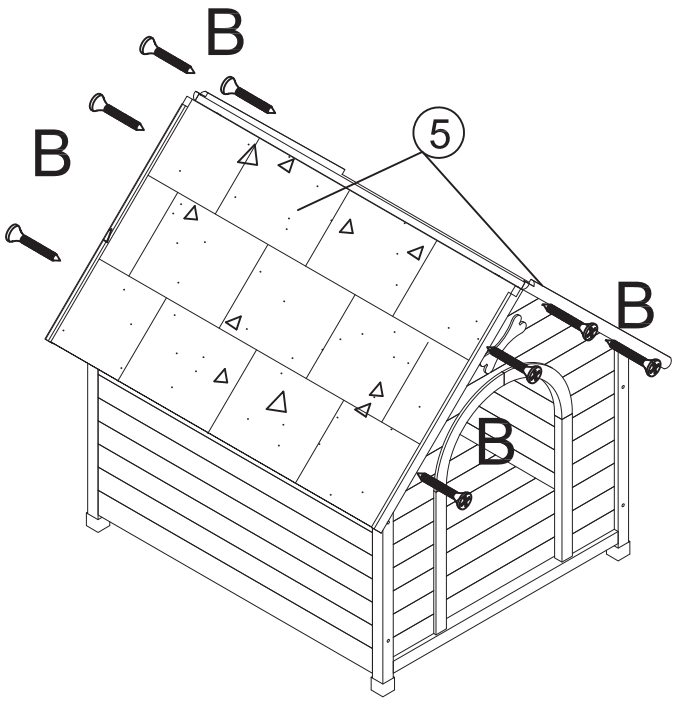

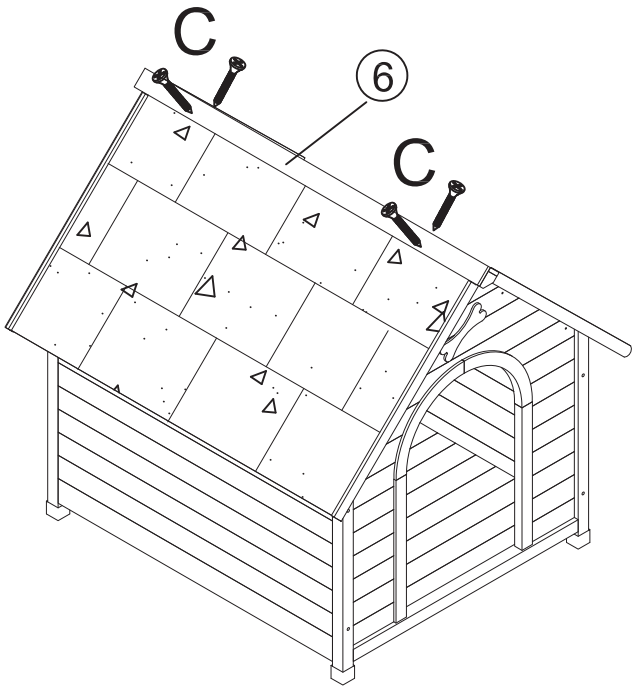

*(SK): PC = kus; PCS = kusy (CZ): PC = kus; PCS = kusy (HU): PC = darab; PCS = darabok (HR): PC = komad; PCS = komadi (RO): PC = bucată; PCS = bucăți (EN): PC = piece; PCS = pieces (DE): PC = Stück; PCS = Stücke (SI): PC = kos; PCS = kosi